STIMBA VISIONPICK · QUALITY INSPECTION WITH ARTIFICIAL INTELLIGENCE

Quality inspection you set up yourself: AI designs the fixture and the robot motion

VisionPick inspects finished parts with cameras and AI and stores the images and a verdict for every inspection point of every part. It comes as a **cell with a Universal Robots cobot** (VisionPick Cell) or as a **fixed station with six cameras** (VisionPick Station). From the 3D model of the part, AI designs a fixture that you **print on your own 3D printer**, and plans the camera views and collision-free robot paths. Everything runs **locally on NVIDIA Jetson Orin**, without the cloud. Your team decides, it does not program.

2	3–5 s	0.04 mm/px	0
forms with one software: with a cobot or with fixed cameras	inspection in the station; in Cell S approx. 25–35 s	finest detail from the camera on the robot	images in the cloud: AI runs in the cell's control cabinet



VisionPick Cell S · UR7e cobot, footprint 900 × 950 mm, height 2.3 m with beacon

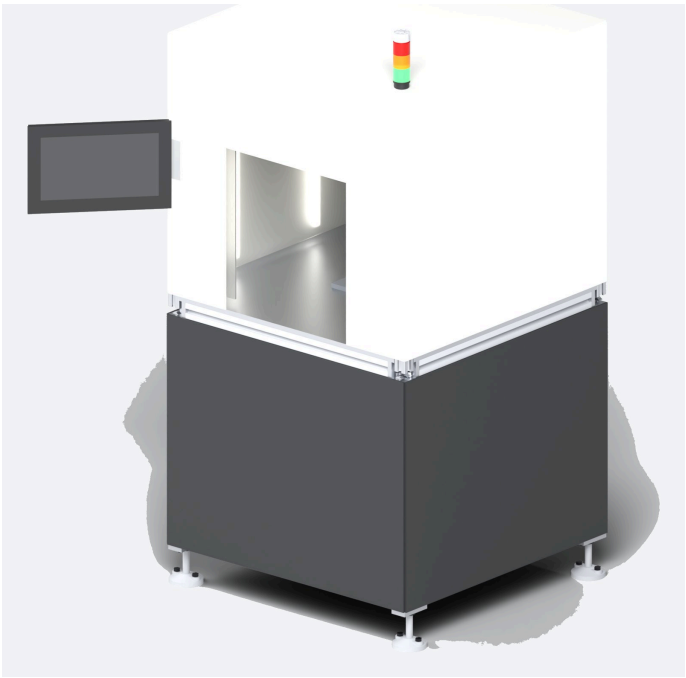

VisionPick Station S · 6 cameras, footprint 900 × 900 mm, height 1.8 m with beacon

● self-service and operation ● AI, vision and software

1 Self-service
Your technician adds a new variant: uploads the STEP, approves the AI proposal, prints the fixture and teaches the inspection.
Benefit: no integrator needed for every change.

2 AI fixture
From the 3D model of the part, a poka-yoke fixture for an M6 / Ø8 grid plate is created as an STL for 3D printing.
Benefit: a fixture in hours, without a designer or machining.

3 AI robot motion
VisionPick computes camera views and robot paths in the 3D model of the cell, with the fixture as an obstacle.
Benefit: no manual point-by-point teaching.

4 Edge AI
NVIDIA Jetson AGX Orin in the control cabinet evaluates an image in 0.1–0.2 s; AI anomaly detection learns from 4–8 good parts.
Benefit: images never leave the plant.

5 Lean design
Robot Units profiles, industrial cameras, AMV lights, Teltonika networking: series parts with CAD from the manufacturer.
Benefit: everything can be re-ordered and replaced a year later.

6 A record of every part
Images, verdict for every point, recipe version, time and operator; CSV export, MES on request.
Benefit: every decision can be traced back.

Renders from the 3D model with a demo part. Technical data are indicative and depend on the part and inspection points. Status: November 2026.

01 Deployment: you supply the part and the criteria, AI does the engineering

1. **STEP and points** — 3D model of the part and a list of what to inspect, with limits.
2. **AI fixture** — A poka-yoke fixture design; you print the STL on your own 3D printer.
3. **AI motion** — Views and robot paths in the 3D model of the cell, collision-free; simulated images.
4. **Teaching** — 4–8 good parts for AI anomaly detection; run-in with ≥ 10 parts including defects.
5. **Approval** — Your quality engineer approves every point and limit.
6. **Shadow mode** — The cell decides while people still inspect; comparison against acceptance criteria.
7. **Production** — The recipe is locked and versioned; any change goes through approval again.

02 In operation: load → inspect → verdict → record

1. **Loading** — The operator places the part on the fixture pins; it fits only one way.
2. **Start** — The scene camera checks presence, variant and that hands are clear; the station starts by itself.
3. **Images** — Each view with its own flash; shop-floor light does not affect the result.
4. **Verdict** — OK / NOK / UNCERTAIN for every point; two methods, UNCERTAIN is never OK.
5. **Result** — Monitor and beacon; the operator confirms NOK. Images and verdict are stored.

AI designs the fixture, you print it in-house

- The AI assistant takes the STEP of the part, finds support surfaces and holes for pins and designs a fixture for a work plate with an M6 / Ø8 grid.
- Output as STL or STEP for a standard 3D printer. A new part variant means a new fixture in hours.
- **The robot really takes it into account:** the same geometry goes into the 3D model of the cell and the planner avoids it as an obstacle.
- Only the 3D shape of the part goes to the AI, not images from production.

AI plans the robot motion, not a programmer

- For every point it chooses a view with the right working distance and depth of field.
- It checks reach, singularities and a single arm configuration for the whole cycle.
- Paths are free of collisions with the part, fixture, walls and cables; views are ordered for the shortest cycle.
- Robot program: `vp Detect` + `If vp_detect_ok()`. UR CB3, e-Series and PolyScope X.

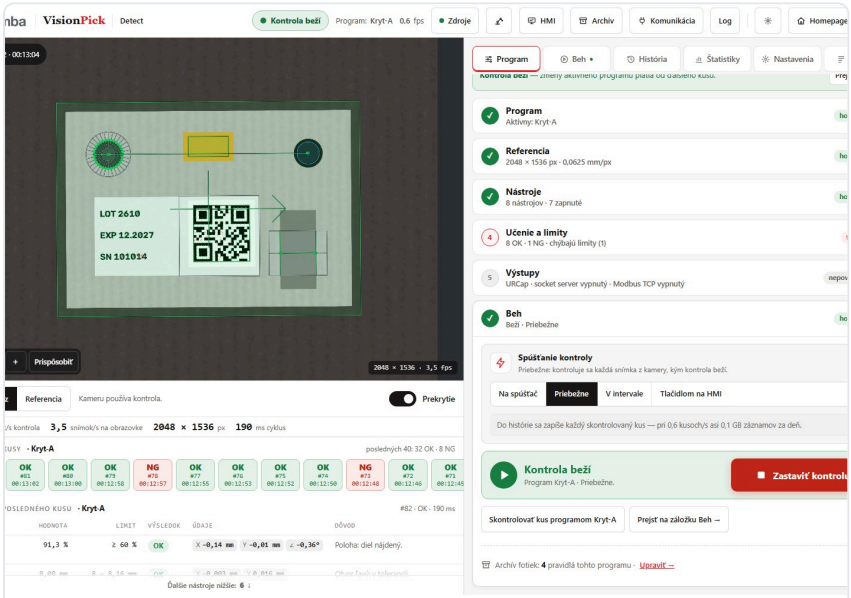

A new inspection in 6 steps
Program, reference, tools, teaching and limits, outputs, run. Real screen from Jetson Orin.

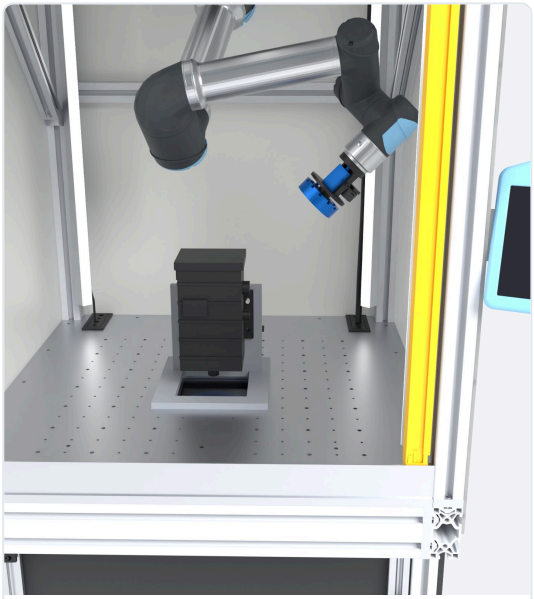

Camera on the robot
5 MP industrial camera (in Cell S, 12 MP optional) with a polarised ring light above the demo part in the fixture.

Renders from the 3D model with a demo part. Technical data are indicative and depend on the part and inspection points. Status: November 2026.

01 VisionPick Cell S: the cobot moves around the part through 8 to 12 views

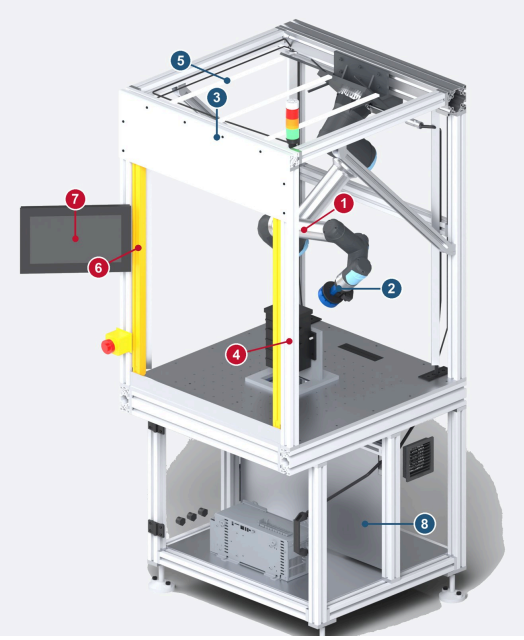

Walls hidden; numbers match the list on the right.

1. **Universal Robots UR7e cobot** mounted rear-top at 45°: reaches every view and stays out of the way when loading.
2. **Industrial wrist camera** 5 MP (12 MP optional) with a polarised ring light, ≈ 0.04 mm/px.
3. **Scene camera** checks presence and variant of the part and that hands are out of the cell.
4. **Part in a 3D-printed fixture** on a plate with an M6 / Ø8 grid.
5. **Opal walls and LED ceiling**: the whole cell works as one large diffuse light.
6. **Light curtain** in the loading opening: the robot moves only when the opening is clear.
7. **Result monitor** on a VESA swing arm, beacon with sound.
8. **Edge AI computer** with NVIDIA Jetson AGX Orin in the cabinet below the plate.

02 VisionPick Station S: six fixed cameras, no motion

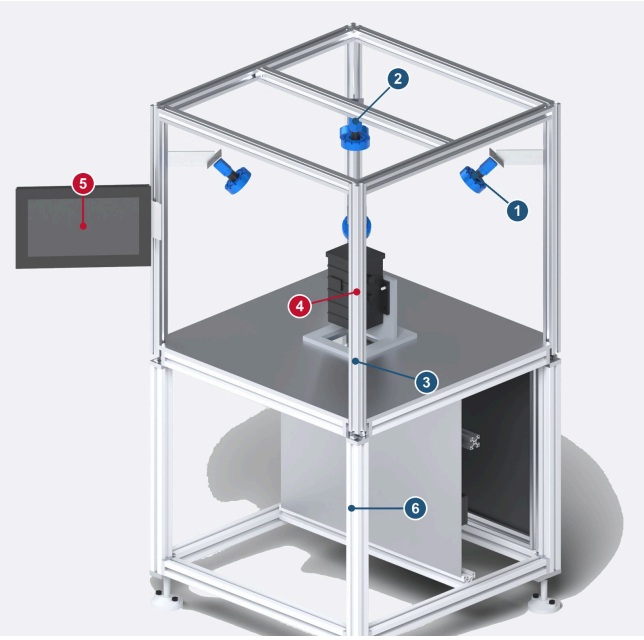

Walls hidden; numbers match the list on the right.

1. **Four corner cameras** at 45°: each sees two sides and the top edge, ≈ 0.14 mm/px.
2. **Top camera** ≈ 0.10 mm/px: lid and orientation; it also triggers the inspection.
3. **Bottom camera** through glass with a dome light, ≈ 0.03 mm/px.
4. **Part in a fixture**, the same fixture as in the cell.
5. **Monitor and beacon**: OK / NOK, the reason and an image of the failed point.
6. **Edge AI computer** in the base with power supply, UPS and networking.

	VISIONPICK CELL	VISIONPICK STATION
Principle	the cobot carries the camera around the part, 8–12 views	6 fixed cameras: 4 corners, top, bottom
Finest detail	≈ 0.04 mm/px	≈ 0.03 mm/px from below, 0.14 mm/px on the sides
Inspection time	approx. 25–35 s (size S, demo part)	3–5 s
New variant	new views in software	new recipe; if a point is not visible, an extra camera
Safety	light curtain, safety relay	no motion, no curtain, starts by itself
Common	VisionPick software, AI fixture, recipes, edge AI without the cloud, a record of every part, 230 V, ready for CE	

Renders from the 3D model with a demo part. Technical data are indicative and depend on the part and inspection points. Status: November 2026.

01 AI that learns under the supervision of your quality engineer

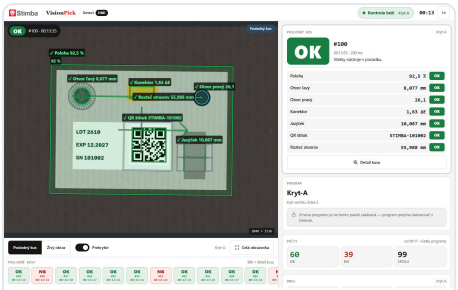

Part result
Verdict, measured values in mm and the status of every tool.

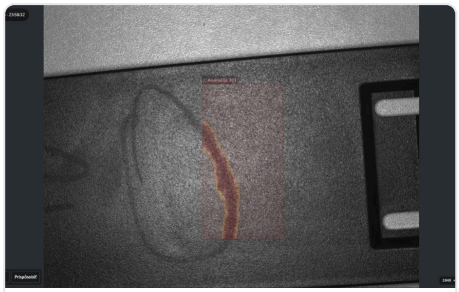

AI anomaly detection
A model trained only on good parts flagged the defect by itself.

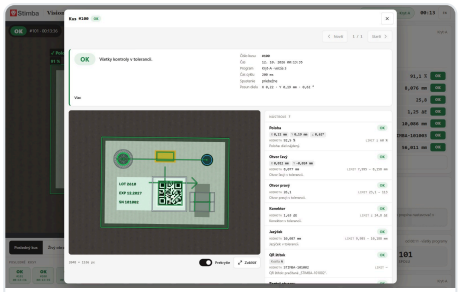

Audit record
When, with which program, with what result and why.

Edge AI without the cloud

- NVIDIA Jetson AGX Orin in the control cabinet; one image in 0.1–0.2 s.
- AI anomaly detection also finds undescribed defects: scratches, dirt, missing parts. 17 classic tools: position, presence, dimensions in mm, codes and text.
- Controlled lighting: opal walls with LEDs and a polarised ring at every camera, flash only during exposure.

Learning that never changes silently

- Confirmed decisions are stored in the data; the system tracks drift and warns before results change.
- A retrained model first runs in shadow mode and goes into production only after approval.
- Outputs: URCap, Modbus TCP, EtherNet/IP, HTTP for MES, CSV export.

02 Sizes S, M and L from standard parts, XL per project

SIZE	PART UP TO	VISIONPICK CELL	VISIONPICK STATION
S	≈ 300 × 300 × 300 mm	UR7e · 5 MP · 900 × 950 mm · 2.3 m	900 × 900 mm · 1.8 m
M	≈ 600 × 400 × 400 mm	UR7e on a bridge · 12 MP · 1,600 × 1,450 mm · 2.5 m	≈ 1,200 × 1,200 mm · ≈ 2.2 m · 12 MP
L	≈ 1,200 × 800 × 600 mm	UR7e on a linear axis · 12 MP · 2,200 × 1,850 mm · 2.7 m	≈ 1,850 × 1,850 mm · ≈ 2.8 m · 24 MP
XL	large parts	gantry or long linear track, engineered per project on request	

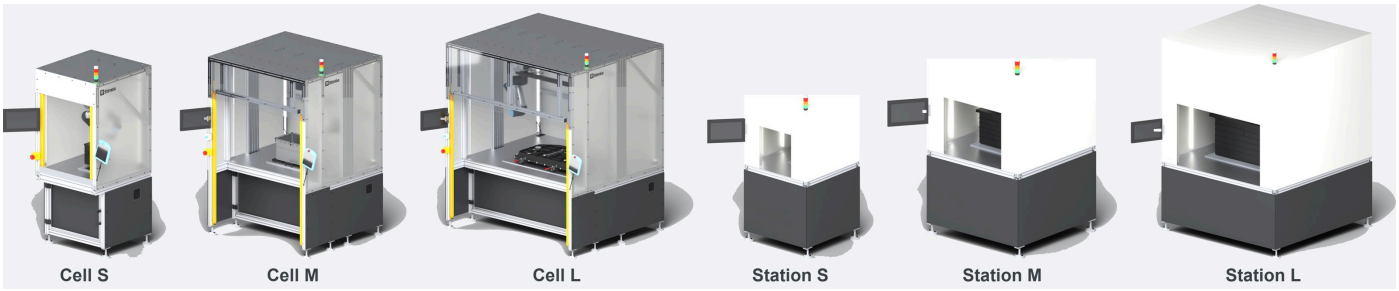

Cell and Station S, M, L at roughly the same scale (renders from 3D models, demo part).

Dimensions of M and L are indicative, based on robot reach and camera field-of-view calculations and 3D models; the table shows robot, camera (S: 12 MP optional), footprint and height (cells with beacon). Inspection time in the cell approx. S 25–35 s, M 25–45 s, L 55–90 s depending on the part and the number of views. A larger station sees the sides at ≈ 0.26 (M) and 0.32 mm/px (L), the camera on the robot stays at ≈ 0.04 mm/px: the station for overview points, the cell for details.

After handover

- Your team adds new variants after training.
- Perpetual VisionPick licence tied to the device.
- Operator screen without access to settings.

Service packages

- Remote support via a secure router.
- Fine-tuning the application for new parts.
- Invoiced separately, as needed.

Why STIMBA

- 70+ cobot cells and 40+ vision systems, e.g. Kia Slovakia, Vertiv, IKEA Components.
- Working with Universal Robots since 2014.
- Own software, local support.

Try VisionPick on your own part. Send us the 3D model and a list of inspection points; we will show simulated images from the cell or station before you order.

Ing. Andrej Bielik, CEO · +421 907 414 389 · bielik@stimba.sk

STIMBA, s. r. o. · K výstavisku 582, 911 01 Trenčín, Slovakia · www.stimba.sk

Renders from the 3D model with a demo part. Technical data are indicative and depend on the part and inspection points. Status: November 2026.