STIMBA VISIONPICK · PARTS UP TO 1,200 MM, SAME SOFTWARE

One UR7e cobot inspects parts up to 1.2 m: in M it hangs above the part, in L it travels on an axis

VisionPick Cell M and L extend the S cell to parts up to **600 × 400 × 400 mm** and **1,200 × 800 × 600 mm**. A Universal Robots UR7e cobot with a wrist camera hangs from a bridge directly above the part; in L it moves along a **linear axis**. From the 3D model of the part, VisionPick proposes the camera views and robot paths, checks them for collisions in simulation, and AI evaluates the inspection points **locally on NVIDIA Jetson AGX Orin**. Software and operation are the same as in the S cell; JigDesigner designs the fixture for the part. For even larger parts, VisionPick Cell XL uses a gantry or a long travel axis, as a project on request.

31 / 77	25–45 / 55–90 s	≤ 0.03 mm	0
inspection points on the M / L sample parts, all reachable in simulation	approx. imaging time per M / L part incl. moves; confirmed on the first unit	frame vibration at the camera by FEM calculation; robot arm to be measured	images in the cloud: AI runs in the cell's control cabinet

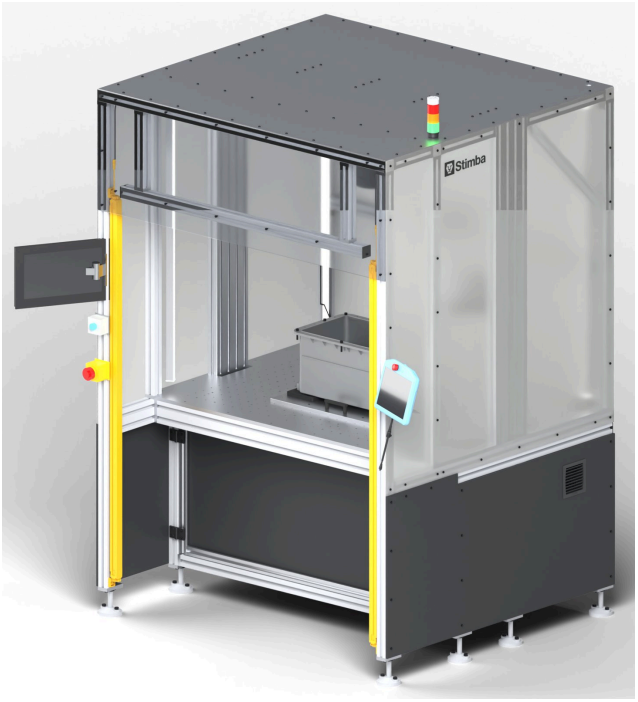

VisionPick Cell M · UR7e on a bridge, footprint 1,600 × 1,450 mm, height 2.3 m (2.5 m with beacon)

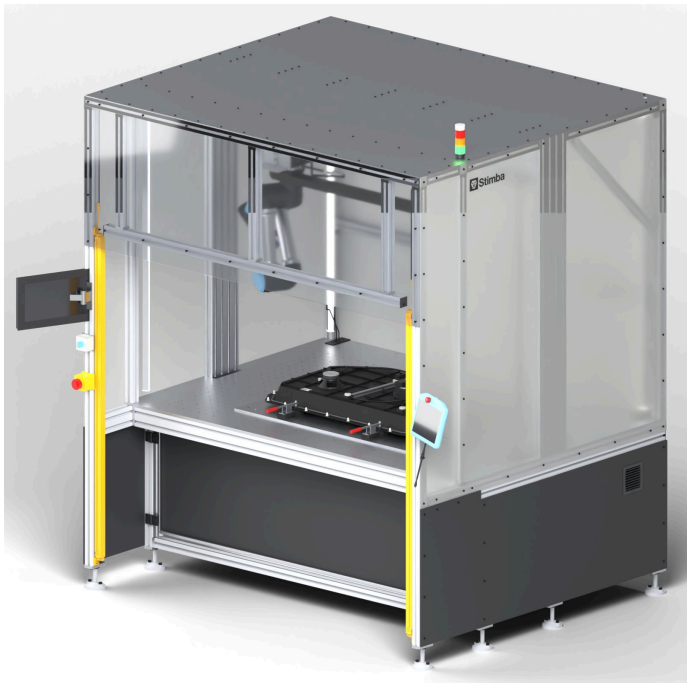

VisionPick Cell L · UR7e on a 1,400 mm axis, footprint 2,200 × 1,850 mm, height 2.55 m (2.7 m with beacon)

● structure, safety and operation ● AI, vision and software

1 Robot above the part
The UR7e hangs head-down above the centre of the part: it sees the top and sides of the part and stays out of the operator's way during loading.
Benefit: one light cobot instead of a large robot.

2 Axis in L
Linear axis with ball screw, 1,400 mm stroke; the robot images the part from three axis positions.
Benefit: a 1.1 m long part without a second robot.

3 Stiff frame
Robot Units profiles up to 100 × 200 mm, a bridge and shear walls. Frame FEM: camera vibration below 0.03 mm, settling within 0.17 s.
Benefit: a short flash suppresses motion blur; the imaging time still allows for arm settling.

4 AI views and paths
From the part STEP and the list of points, VisionPick proposes camera poses and robot paths checked in simulation: M 31 points in 23 poses, L 77 points in 49 poses.
Benefit: no point-by-point teaching; a technician approves the poses.

5 Safe loading
Light curtain from the floor in a 300 mm tunnel plus UR reduced mode (EN ISO 13855). The robot restarts only after a reset button outside the tunnel.
Benefit: the operator walks right up to the plate, no doors.

6 Edge AI and records
NVIDIA Jetson AGX Orin, AI anomaly detection and 17 classic tools; images and a verdict for every point, CSV export, MES on request.
Benefit: images never leave the plant.

STIMBA, s. r. o., K výstavisku 582, 911 01 Trenčín, Slovakia · Andrej Bielik: +421 907 414 389, bielik@stimba.sk · www.stimba.sk

Renderings from the 3D model with a sample part. Technical data are indicative and depend on the part and inspection points. Status: November 2026.

01 VisionPick Cell M: the cobot hangs above the part, no axis

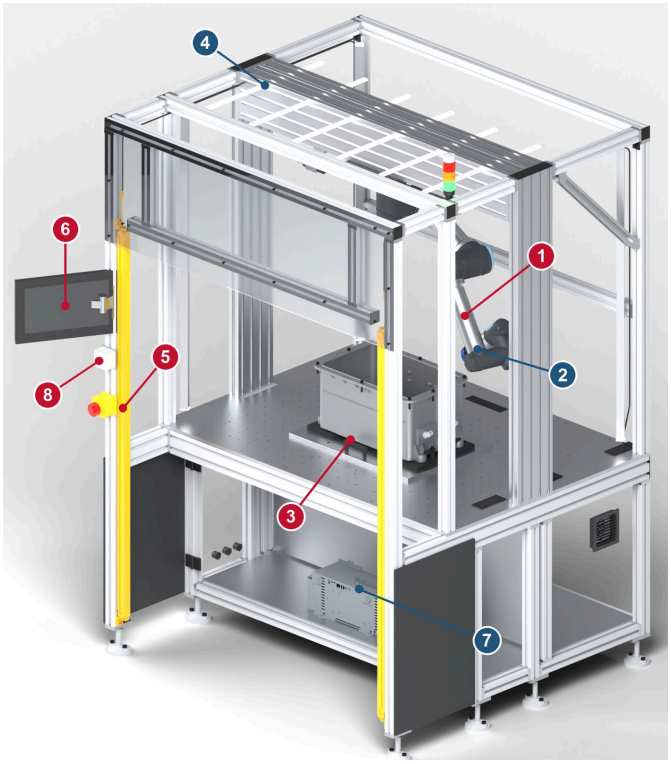

Walls and roof hidden; numbers match the list on the right.

1. **Universal Robots UR7e cobot** on a bridge of two 100 × 200 mm profiles, base 1.18 m above the plate: in simulation, all views in a single arm configuration.
2. **Industrial wrist camera** 12 MP, 16 mm lens, polarised ring light with strobe; field ≈ 120 × 87 mm, ≈ 0.04 mm/px (calculated).
3. **Part in its JigDesigner fixture** on a 1,600 × 1,150 mm work plate with an M6 grid at 50 mm and Ø8 H7 holes at 100 mm.
4. **Opal walls and illuminated ceiling**: the whole cell acts as one large diffuse light.
5. **Light curtain** PILZ type 4 from the floor in a 300 mm tunnel without a table; restart is confirmed by a button outside the tunnel.
6. **Results monitor** on a swivel arm, emergency stop button and beacon with buzzer.
7. **Cabinet under the plate**: UR control box, edge AI computer, power supplies, safety relay and network.
8. **RESET button** on the post in front of the curtain, with a view of the whole tunnel.

02 Sample part and fixture: 31 inspection points

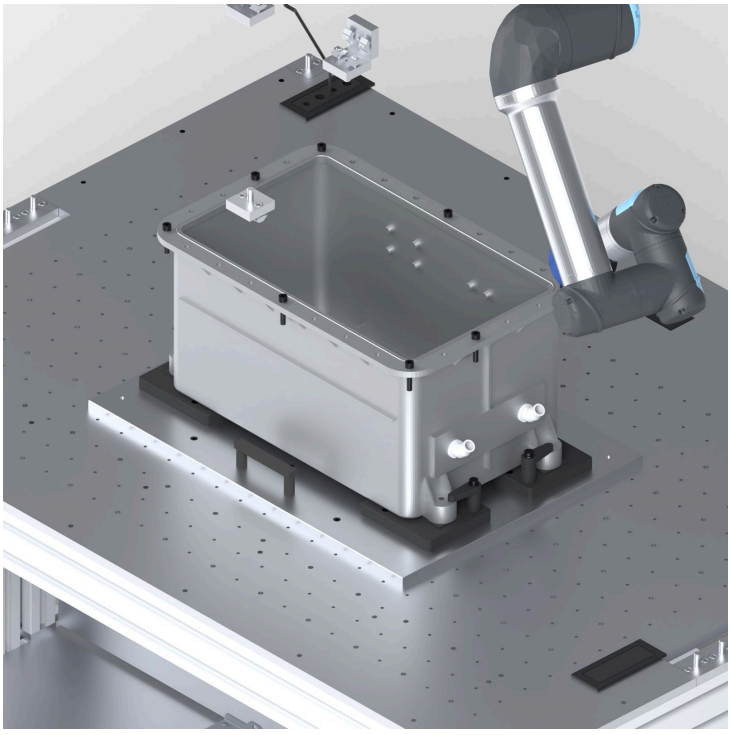

Electric drive housing half in its JigDesigner fixture; a neutral STIMBA sample part.

Part: AlSi9Cu3 die casting, 591 × 365 × 280 mm, 9.9 kg.

- ✓ seal in the flange groove
- ✓ pre-assembled M8 screws with washers
- ✓ M10 threaded inserts
- ✓ bearing seats
- ✓ high- and low-voltage connectors
- ✓ coolant nipples
- ✓ breather
- ✓ label with DMC code

Fixture (JigDesigner): cut EN AW-5083 plate with holes on the grid only, four 3D-printed PETG-CF nests under the lugs, a Ø10 pin and a Ø6 pin in a diamond bushing (the part fits only one way) and four swing hold-downs. No sensors; BOM and assembly guide included.

Planning result in simulation: 31 of 31 points in 23 camera poses; imaging approx. 25–45 s per part depending on arm settling, confirmed by measurement on the first unit.

What we check on your part: from above, the robot cannot see features facing the operator or low on the sides. We cover them with an oblique view, a rotary fixture or a fixed camera; on the sample part, connectors and label sit on the rear wall.

Renderings from the 3D model with a sample part. Technical data are indicative and depend on the part and inspection points. Status: November 2026.

01 VisionPick Cell L: the cobot on a linear axis above the part

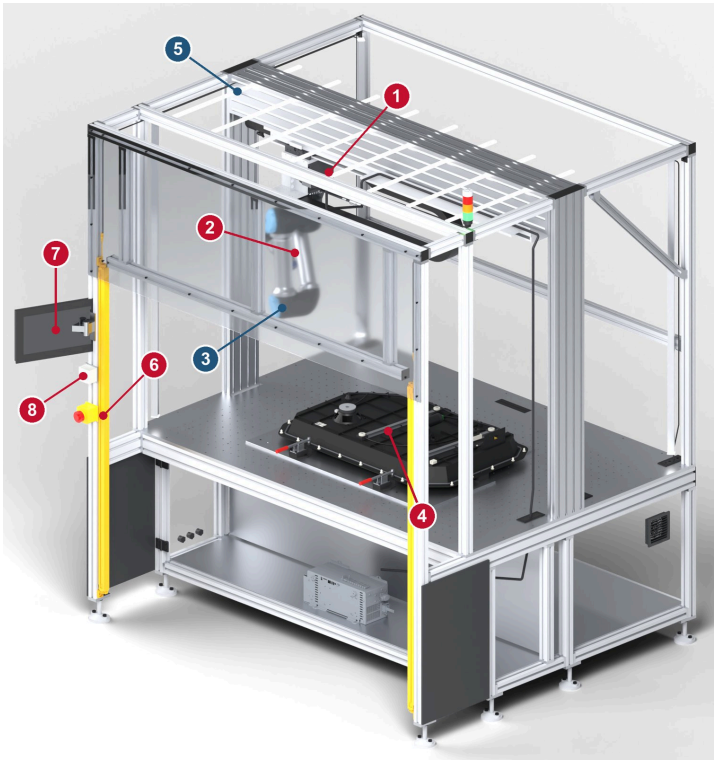

Walls and roof hidden; numbers match the list on the right.

1. **Linear axis** with ball screw, 1,400 mm stroke, under the bridge; robot cable in an energy chain.
2. **UR7e cobot** head-down on the axis carriage, 0.55 m above the part: in simulation, reaches the top and sides along the whole part.
3. **Industrial wrist camera** 12 MP, 16 mm lens, polarised ring light with strobe; field ≈ 120 × 87 mm, ≈ 0.04 mm/px (calculated).
4. **Part in its JigDesigner fixture** on a 2,200 × 1,550 mm work plate with an M6 grid at 50 mm and Ø8 H7 holes at 100 mm.
5. **Opal walls and illuminated ceiling** for even light.
6. **Light curtain** PILZ type 4 from the floor in a 300 mm tunnel without a table; restart by a button outside the tunnel.
7. **Results monitor**, emergency stop button and beacon; cabinet with edge AI under the plate.
8. **RESET button** on the post in front of the curtain, with a view of the whole tunnel.

02 Sample part and fixture: 77 inspection points

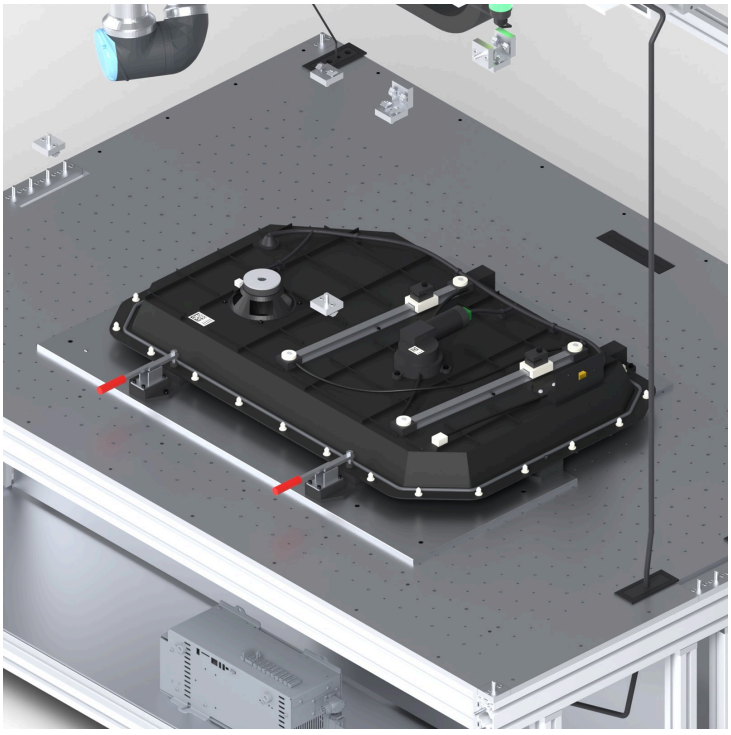

Front door module carrier in its JigDesigner fixture; a neutral STIMBA sample part.

Part: injection-moulded PP-GF30, 1,100 × 720 × 155 mm, 6.0 kg.

- ✓ 24 clips
- ✓ perimeter sealing strip
- ✓ window regulator cables and drums
- ✓ regulator motor
- ✓ loudspeaker
- ✓ lock and Bowden cable
- ✓ wiring and connectors
- ✓ coded labels

Fixture (JigDesigner): two cut EN AW-5083 plates on the grid, six 3D-printed PETG-CF supports, a Ø10 pin and a Ø6 pin in a diamond bushing. The part slides in from the front under two printed rear hold-downs and is locked by two standard toggle clamps with handles facing the operator.

Planning result in simulation: 77 of 77 points in 49 camera poses from three axis positions; imaging approx. 55–90 s per part, confirmed by measurement on the first unit.

Axis travel and imaging: the axis moves only between groups of views while the robot stands still. By FEM, the frame settles within 0.17 s; the imaging time allows 0.25–0.55 s of arm settling per view, and a short flash suppresses motion blur.

Renderings from the 3D model with a sample part. Technical data are indicative and depend on the part and inspection points. Status: November 2026.

01 M and L in figures

	VISIONPICK CELL M	VISIONPICK CELL L
Parts up to	≈ 600 × 400 × 400 mm	≈ 1,200 × 800 × 600 mm
Robot	UR7e (7 kg, 850 mm reach), hanging from a bridge above the part	UR7e on a linear axis with ball screw, 1,400 mm stroke
Footprint · height	1,600 × 1,450 mm · 2.3 m, 2.5 m with beacon	2,200 × 1,850 mm · 2.55 m, 2.7 m with beacon
Work plate	1,600 × 1,150 mm, height 900 mm	2,200 × 1,550 mm, height 900 mm
Plate grid	M6 at 50 mm, Ø8 H7 pin holes at 100 mm; aluminium EN AW-5083	
Robot camera	12 MP industrial camera, 16 mm lens, polarised ring light, camera-triggered strobe (target ≤ 1 ms, to be verified by test); at 200 mm field of view ≈ 120 × 87 mm, ≈ 0.04 mm/px (calculated)	
Scene 3D camera	On the ceiling above the opening: before the robot moves it checks that the part is present, the right variant and correctly seated	
Sample part	31 points · 23 poses (simulation)	77 points · 49 poses from 3 axis positions (simulation)
Imaging time	approx. 25–45 s	approx. 55–90 s
	depending on part and number of views, with 0.25–0.55 s arm settling per view; confirmed by measurement on the first unit	
Frame	Robot Units, profiles 50 × 50 to 100 × 200 mm, bridge, aluminium-sheet shear walls	
Frame FEM	camera vibration 0.013 mm, frame settling within 0.02 s	camera vibration 0.026 mm, frame settling within 0.17 s
Safety	PILZ type 4 light curtain from the floor in a 300 mm tunnel without a table, restart by a button outside the tunnel, UR reduced mode, PILZ safety relay, emergency stop button	
Fixture	designed by JigDesigner from the part STEP: 3D-printed PETG-CF plus standard parts (plate, pins, clamps), BOM and assembly guide, no sensors	
Edge AI	NVIDIA Jetson AGX Orin in the cabinet; approx. 0.1–0.2 s per image, no cloud	
Interfaces	URCap, Modbus TCP, EtherNet/IP, HTTP for MES, CSV export	

02 From the part's 3D model to the first inspected piece

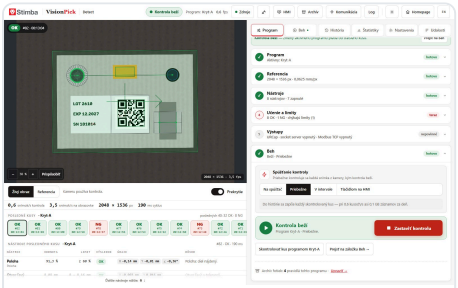

1 · Points and limits
Upload the part STEP and mark what to inspect. VisionPick proposes camera poses, robot paths and the fixture.

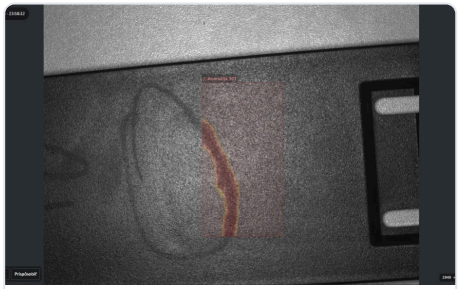

2 · Training and approval
AI anomaly detection typically learns from 4–8 good parts; your quality engineer approves every point and limit.

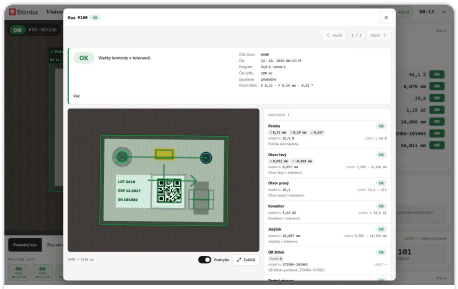

3 · Production
OK / NOK / UNCERTAIN for every point, images and verdict for every part. UNCERTAIN is never OK.

What we need from you

- 3D model of the part (STEP).
- List of inspection points with limits.
- Good parts and defect samples for training.

Same as in S

- VisionPick software and operator screen.
- JigDesigner fixtures on the plate grid.
- Standard components with manufacturer CAD.

Why STIMBA

- 70+ cobot cells and 40+ vision systems.
- Working with Universal Robots since 2014.
- Our own software and local support.

Try VisionPick on your own part. Send us the 3D model and the list of inspection points; before you order, we will show you the camera views and robot paths in the 3D model of the cell.

Andrej Bielik, Managing Director · +421 907 414 389 · bielik@stimba.sk **STIMBA, s. r. o.** · K výstavisku 582, 911 01 Trenčín, Slovakia · www.stimba.sk

Renderings from the 3D model with a sample part. Technical data are indicative and depend on the part and inspection points. Status: November 2026.